(Toll Free) Phone 866-452-1845 Fax 910-452-1848

Full Wrap Lead Lined 3-Sided Frames (Profiles Variable)

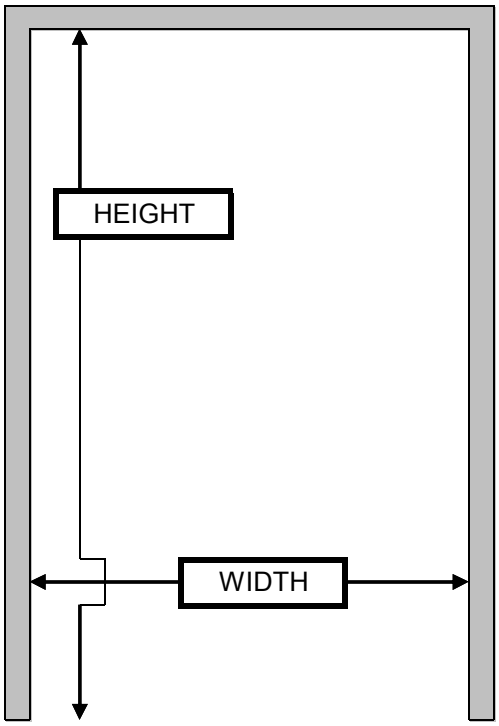

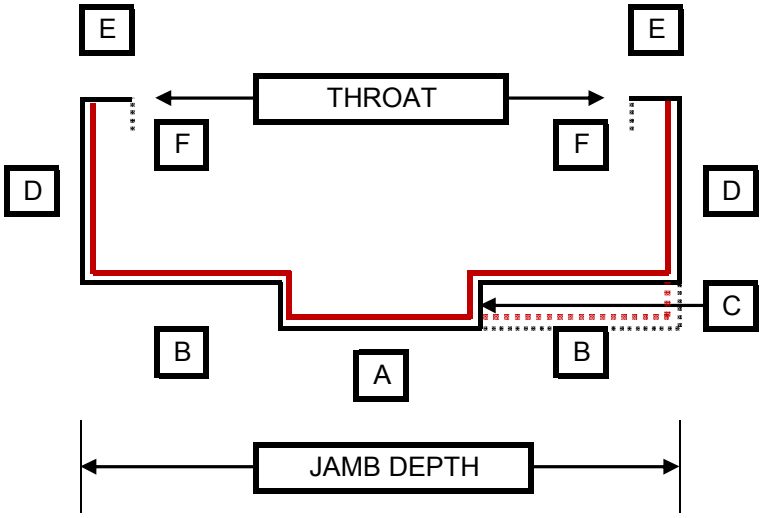

A = SOFFIT
B = RABBETS
C = STOP
D = FACES
E = RETURNS
F = BACKBEND RETURNS

No Fire Rating Available
Available KD or Welded (Face Only or Continuous)
Rough Opening = Varies per Frame Type
ANCHOR OPTIONS - Compression,SS, Masonry
1/16" or 1/8" Lead Thickness Available
Also Available in Half Wrap for In-Swing Units