(Toll Free) Phone 866-452-1845 Fax 910-452-1848

Standard H Profile 3-Sided Frames (Drywall Double Egress)

FRAME PART	UL RATED	NON RATED
THROAT		
MINIMUM	3 3/4"	3 3/4"
MAXIMUM	13"	No Limit
A=SOFFIT		
MINIMUM	1"	1"
MAXIMUM	6 1/32"	No Limit
B=RABBET		
MINIMUM	1 9/16"	5/8"
MAXIMUM	To Suit Door	No Limit
C=STOPS		
MINIMUM	5/8"	5/8"
MAXIMUM	1"	No Limit
D=FACE		
MINIMUM	1 3/8"	1"
MAXIMUM	4"	No Limit
E=RETURNS		
MINIMUM	1/2"	7/16"
MAXIMUM	3/4"	Varies
F=DW Returns		
MINIMUM	3/8"	3/8"
MAXIMUM	3/4"	Varies
HEIGHT		
MINIMUM	20"	20"
MAXIMUM	96"	No Limit
WIDTH		
MINIMUM	12"	12"
MAXIMUM	96"	No Limit

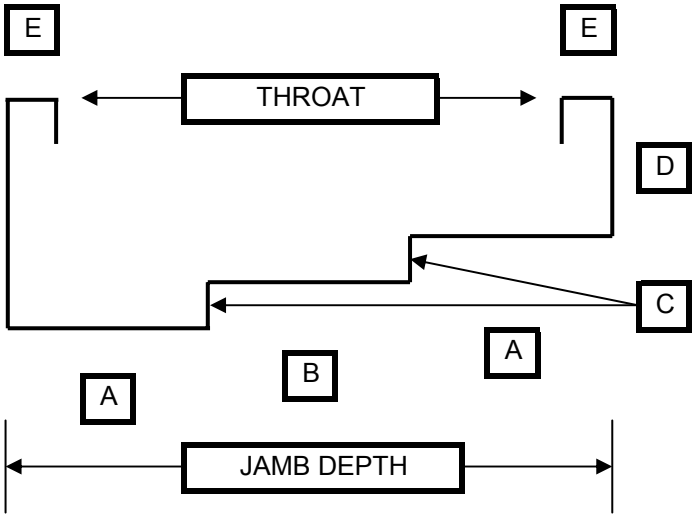

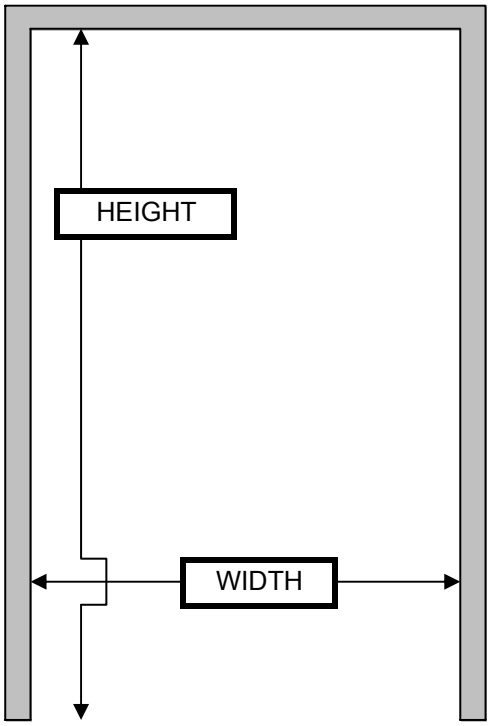

** Maximum Fire Rating = 90 Minute **

KD Rough Opening = Door Opening + 3" W, + 1" H

Available KD or Welded (Face Only or Continuous)

ANCHOR OPTIONS
UL - All types
Non UL - SAME